Computer Networks

Fall 2024 Semester

Course Code: CS – 3001

Offered to BSCS22, BDS21

Course Instructor: Aftab Alam

Lecture 4

August 29, 2024 (Thursday)

Today's Agenda

- Networking Basics
  - Network Types
  - Network Topologies
  - Client-Server Model vs P2P Model
  - OSI Reference Model and TCP/IP Model
  - IP Addressing
  - Network Devices
  - Difference between Bandwidth and Latency
  - Wireless Networking
  - NAT (Network Address Translation)
- Switched Networks (Circuit Switching versus Packet Switching)

IP Addressing

- **IPv4:** A 32-bit address format, e.g., 192.168.1.1. It is the most commonly used IP address format but is being gradually replaced by IPv6.
- **IPv6:** A 128-bit address format designed to replace IPv4 due to the exhaustion of IPv4 addresses, e.g., 2001:0db8:85a3:0000:0000:8a2e:0370:7334.
- **Public and Private IPs:** Public IP addresses are accessible over the internet, while private IP addresses are used within a LAN and are not directly accessible from the internet.
- **Subnetting:** The practice of dividing a network into smaller sub-networks (subnets) to improve management and performance.

Network Devices

- **Router:** Directs data packets between different networks, often connecting a LAN to a WAN like the internet.
- **Gateway:** Gateways can translate one network protocol into another, allowing devices on different types of networks to communicate with each other.
- **Switch:** Connects devices within a LAN, directing data only to the device for which it is intended.
- **Hub:** A basic networking device that broadcasts data to all devices in a network.
- **Firewall:** Monitors and controls incoming and outgoing network traffic based on predetermined security rules.

Network Devices

Modem

NIC

Repeater

Hub

Switch

Router

Bridge

Gateway

Types of Network Devices

Difference Between Bandwidth and Latency

- **Bandwidth:** The maximum rate of data transfer across a network path, typically measured in Mbps or Gbps.

- **Latency:** The time it takes for a data packet to travel from source to destination, usually measured in milliseconds (ms).

Wireless Networking

- **Wi-Fi:** A wireless networking technology that uses radio waves to provide network access.
- **Bluetooth:** A wireless technology standard for exchanging data over short distances.
- **Access Point:** A device that allows wireless devices to connect to a wired network using Wi-Fi or Bluetooth.

NAT (Network Address Translation)

- A technique used by routers to map multiple private IP addresses to a single public IP address and vice versa, allowing devices on a private network to access resources on the internet.

Taxonomy of Switched Networks

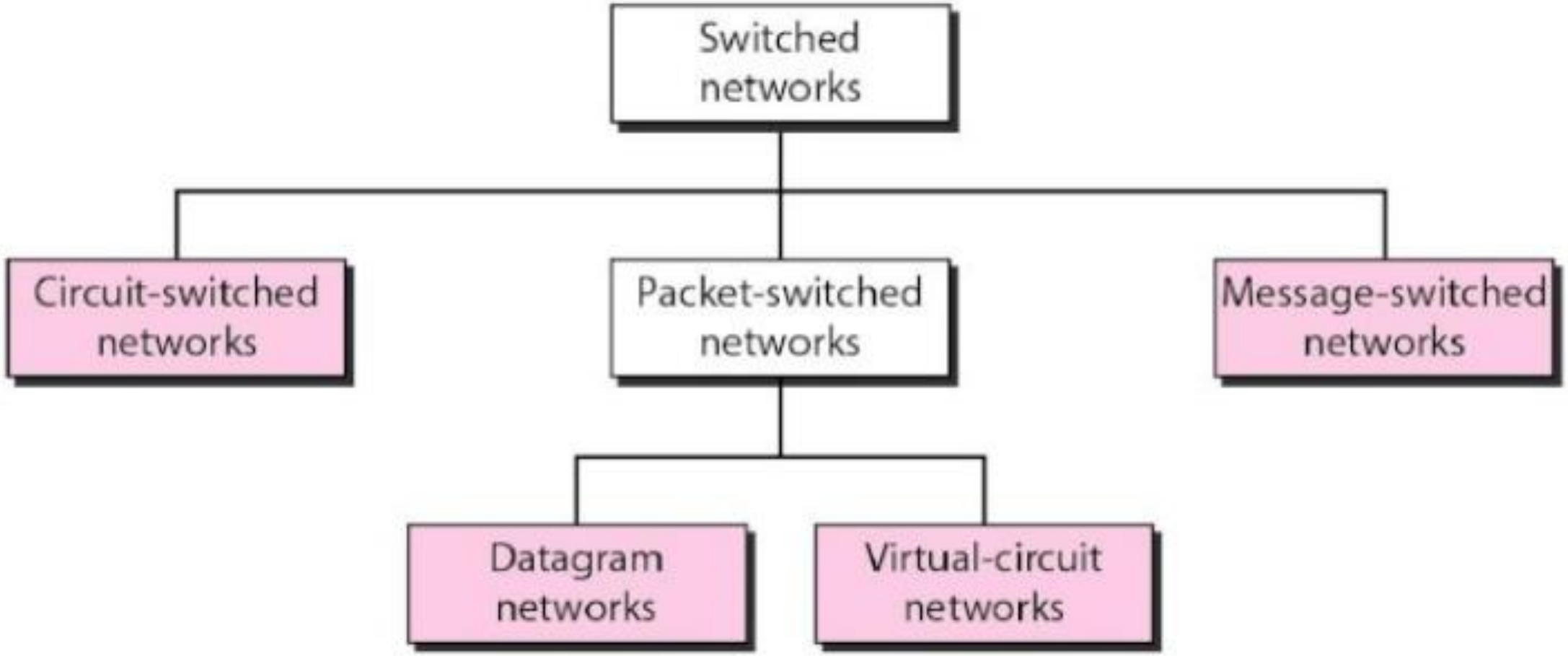

Circuit Switching versus Packet Switching

- Circuit switching is a method of communication where a **dedicated communication path** or circuit is established between two endpoints (such as telephones) for the duration of the communication session.

- Packet switching is a method of communication where **data is broken into small packets** and each packet is transmitted independently over the network, possibly taking different paths to the destination.

Circuit-Switched Networks

In circuit switching, the resources need to be reserved during the setup phase; the resources remain dedicated for the entire duration of data transfer until the teardown phase.

teachoo

CIRCUIT SWITCHING

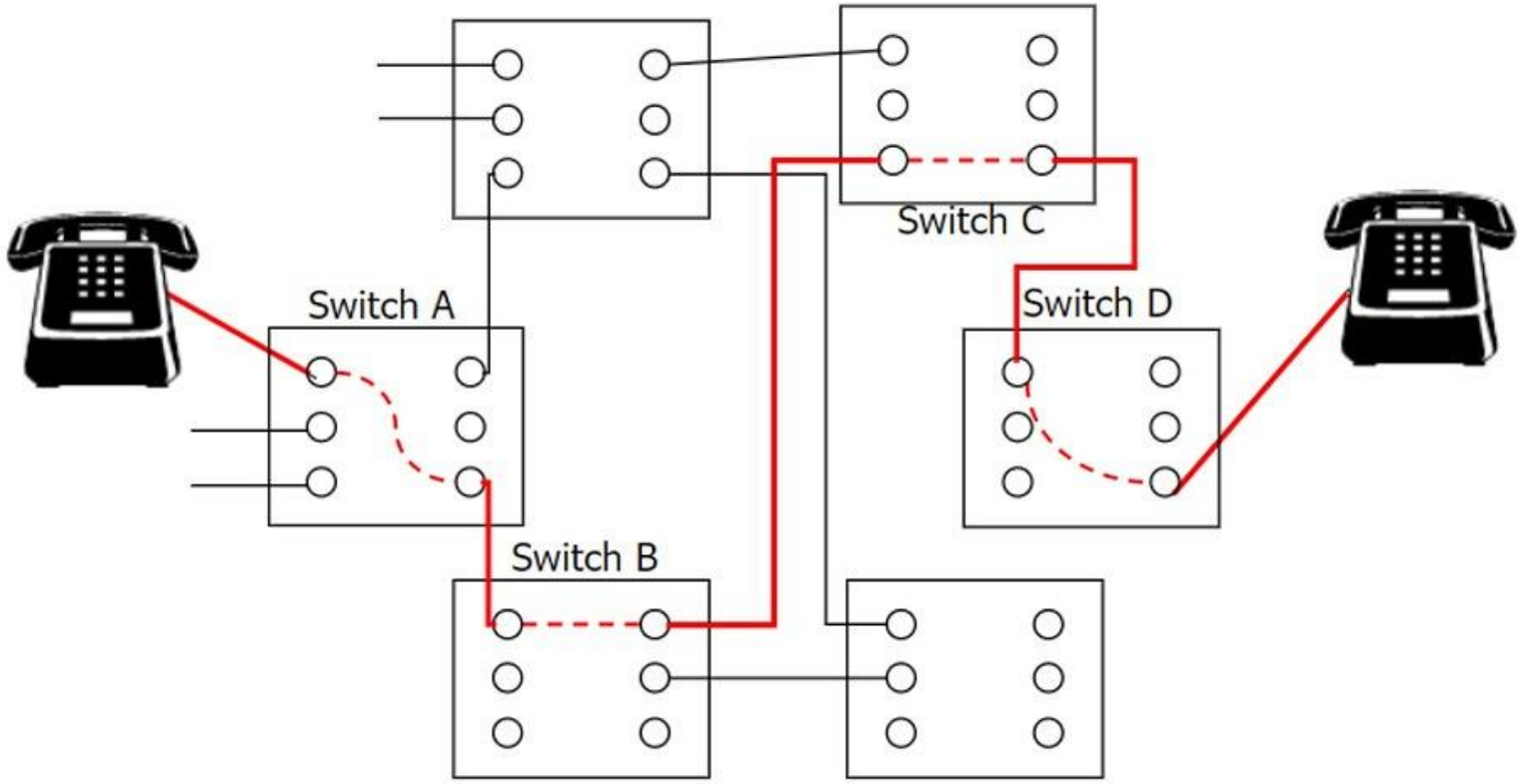

Before **a communication** starts, a **dedicated path** is **identified between** the **sender** and the **receiver**

Key X-tics of Circuit Switching

- **Dedicated Path:** Once a connection is established, a dedicated path is maintained for the entire duration of the communication. This path is exclusive and cannot be used by other communications until the session ends.
- **Fixed Bandwidth:** The entire BW of the circuit is reserved for the communication, whether or not data is being transmitted at all times.
- **Continuous Transmission:** Data is transmitted in a continuous stream over the dedicated path.
- **Connection-Oriented:** A connection must be established before any data can be transmitted. The process involves three phases: setup, transmission, and teardown.
- **Example:** Traditional telephone networks use circuit switching. When a call is made, a dedicated line is established between the two.

Advantages and Disadvantages of Circuit Switching

- **Advantages:**
  - **Consistent Quality:** Because the path is dedicated, there is minimal delay, jitter, or packet loss, leading to consistent quality.
  - **Simplicity:** Circuit switching is straightforward in design and operation, especially in voice communication.
- **Disadvantages:**
  - **Inefficient Resource Use:** Network resources are reserved for the entire duration of the communication, leading to potential inefficiency, especially if the communication is sporadic.
  - **Scalability:** It’s less scalable for data networks because it requires dedicated resources, which limits the number of simultaneous connections.

teachoo

PACKET SWITCHING

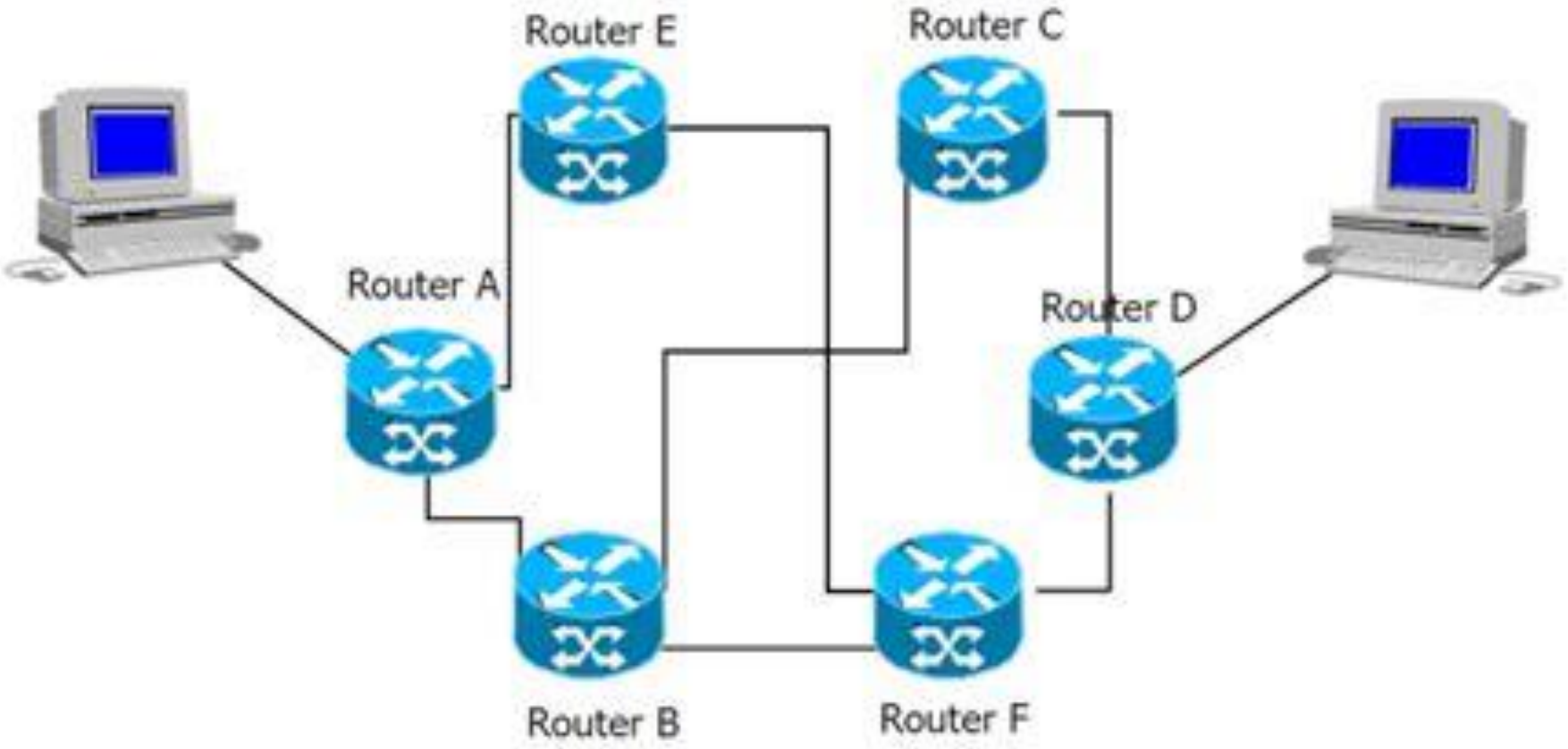

No dedicated path is **identified before**, and each **data unit knows** only the **final receiver's address**

Key X-tics of Packet Switching

- **No Dedicated Path:** Packets are routed independently, and they can take different routes to reach the destination.
- **Efficient Bandwidth Usage:** BW is shared among multiple users. Packets from different sources can share the same network paths, maximizing the use of available resources.
- **Store-and-Forward:** Each packet is received, stored briefly, and then forwarded to the next node in the network. This is why routers in packet-switched networks need buffer memory.
- **Connectionless:** Communication can occur without establishing a dedicated connection. However, protocols like TCP provide connection-oriented communication on top of packet switching.
- **Example:** The internet uses packet switching. Data sent over the internet is broken into packets and sent independently.

Advantages and Disadvantages of Packet Switching

- **Advantages:**
  - **Efficiency:** Network resources are used more efficiently because the communication channel is shared among many users.
  - **Scalability:** Packet-switched networks can handle many simultaneous connections more easily than circuit-switched networks.
  - **Fault Tolerance:** If a network path fails, packets can be rerouted through alternative paths.
- **Disadvantages:**
  - **Variable Quality:** Since packets can take different paths and face different delays, packet switching can lead to variable latency, jitter, and potential packet loss, which can affect real-time communication.
  - **Complexity:** Packet switching requires more complex protocols and management to ensure packets are correctly assembled at the destination.